Tutorial- Solar Splash

The following tutorial shows only **one** of the many ways to construct the bot. The participants are however allowed to use any other method/materials to prepare their own bot as long as it abides by the rules and specifications.

- **Task:**

The participants are supposed to design a solar boat by using solar panels. The maximum area of solar panels is 25cm x 25 cm.

❖ Important points to be considered while designing ROV (Remotely Operated Vehicle) is it's DESIGN.

- It should be designed in such way that it should not sink when you put it into the water.
- It should have proper hydrodynamics.

- **Reference Boats**



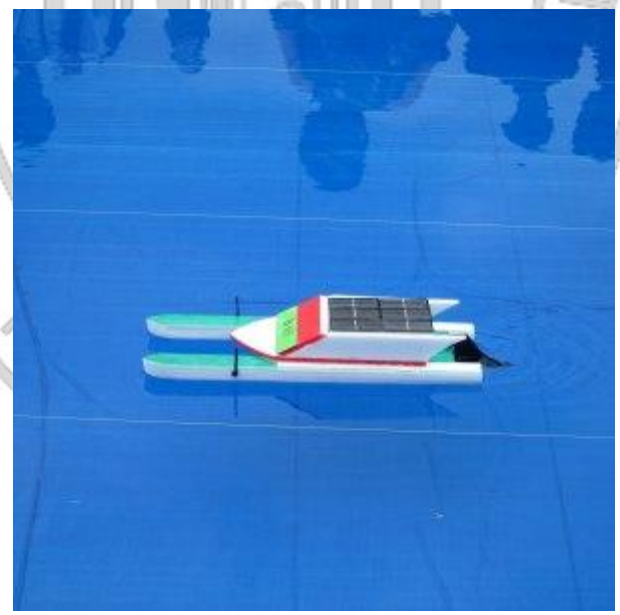

- **Requirements :-**

1. Before making your own ROV you will require material for making frame such as plywood and/ or metal strips whichever you consider to be good. Construct the frame of the boat such that it would not sink when placed in water. Keep its weight as light as possible.

2. Solar Panel of area 25cm x 25cm which will provide sufficient power to drive the motors.

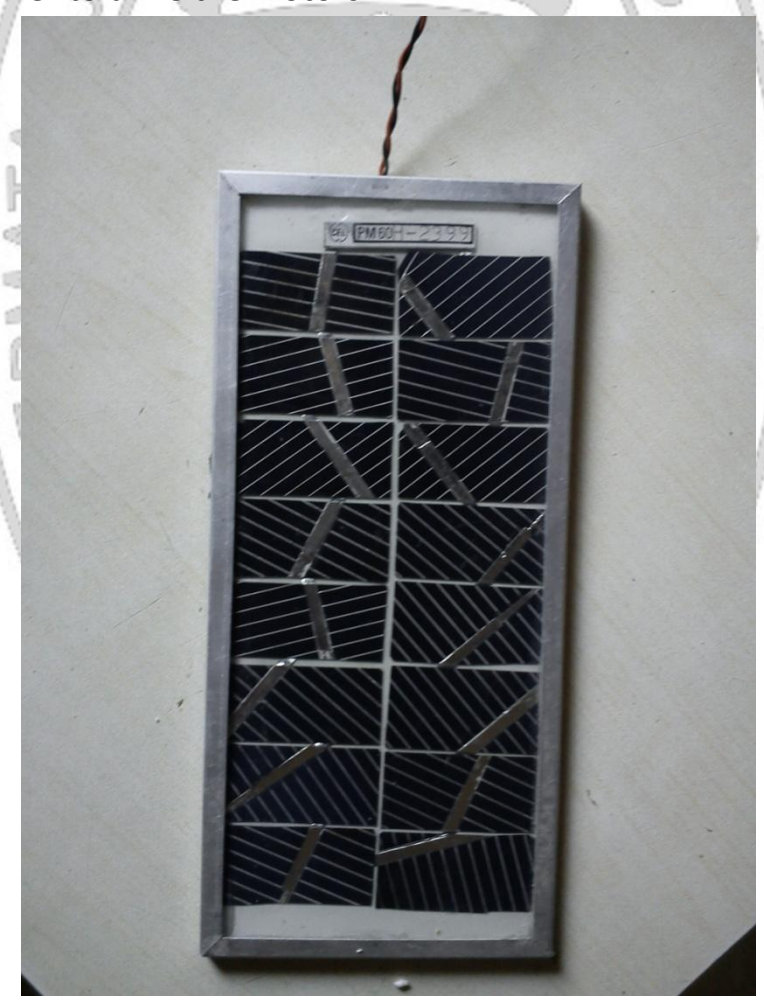

3. DC motors (max. 12 v) - at least 2, as requirement is to navigate the boat.



4. 2 two-way switches on remote to control your boat.



- **Steps for making the boat :-**

a) Make a proper layout of the design. (with defined dimensions)
b) Cut the material used for making the frame as per the design.
c) Assemble the body parts in order to make structure of your boat.
d) Attach the solar panel at desired place.
e) Before fitting the motors make it waterproof and rustproof by applying solvent or tap over them.
f) Attach propeller fins on the motor shaft.
g) See to it that the skeleton is symmetrical.
h) Give the **output of solar panel** as **power supply** to remote of your boat.
i) Make the necessary wire connections.

Connections:

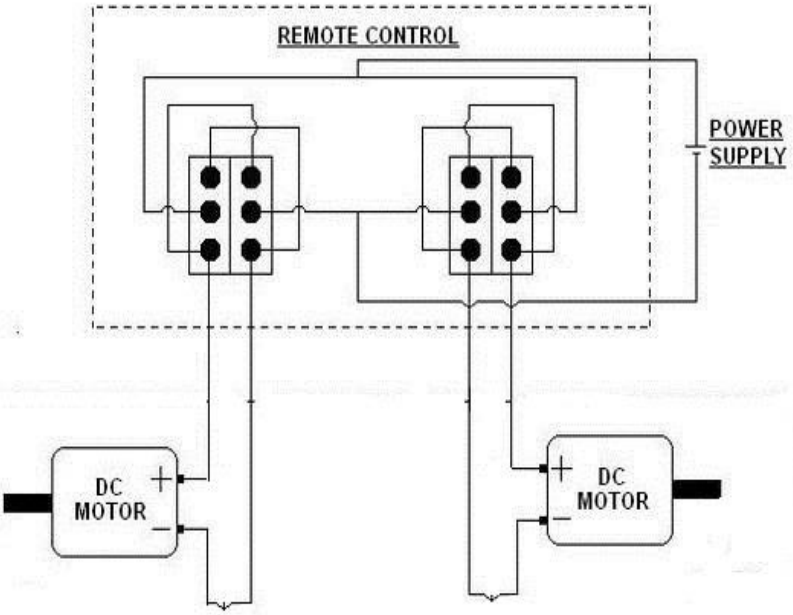

j) Prepare the remote by checking the propeller motion.
k) Attach some weights below the skeleton body symmetrically and light floating material on the top surface of skeleton.
l) Check your boat for balanced motion on water surface.



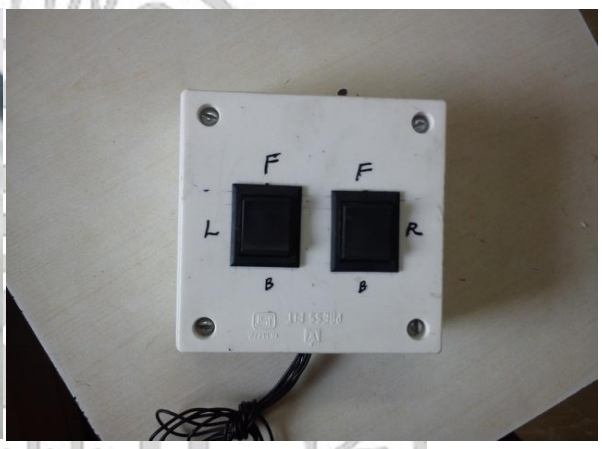





❖Some tips:-

a) Use only two motors so that they can run properly on power supplied by solar panel which will be less comparatively supplied by DC electric supply.
b) Use light weight material to make structure of your boat.

- Links for reference:-

1) http://www.youtube.com/watch?v=nfSAIKup36E&feature=related

2) http://www.youtube.com/watch?v=VfRH2DUIIHQ

For any queries please contact:

Event Heads:

1. Mayuresh Phegade : +91 9769434385
2. Suraj Nair: +91 9833436028

General Manager:

Deep Gudhka: +91 9076787763
deep.gudhka@technovanza.org